Work Order ID 52217

Monday, September 21, 2009 7:52:04 AM

Item ID: D212-664-201
Revision ID: C
Item Name: Crosstube Aft

Accept

Setup Start
Stop

Start Date: 9/21/2009 **Start Qty:** 1.00
Required Date: 10/9/2009 **Req'd Qty:** 1.00
Reference:

Cust Item ID:
Customer:

Run Start
Stop

Approvals: **Process Plan:** [signature] **Date:** 09-9-21 **Tooling:** _____ **Date:** _____
QC: _____ **Date:** _____ **SPC (Y/N):** _____ **Date:** _____

Sequence ID/ Work Center ID	Operation Description	Set Up/ Run Hours	Draw Number	Draw Rev.	Plan Code	Accept Qty	Reject Qty	Reject Number	Insp. Stamp
Draw Nbr	**Revision Nbr**								
D212-664-241	Rev C								
100	DOCUMENT CONTROL	0.00							
DC	**Memo**	0.00							
Document Control	Photocopy bluefile and create labels as per PPP D212-664-201		CHG003						
110	Pick Kit Packaging	0.00							
Packaging	**Memo**	0.00							
Packaging									
120	BENDING MACHINE - CROSSTUBES	0.00							
CNC Bend 2	**Memo**	0.00							
CNC Alpha 160 Bender	Bend tube as per Dwg D212-664-241 using CNC bender program 212-af and Folio FT007								

SCRAP

(IV) MB 09-10-20

Work Order ID 52217

Monday, September 21, 2009 7:52:04 AM

Item ID: D212-664-201
Revision ID: C
Item Name: Crosstube Aft

Start Date: 9/21/2009 **Start Qty:** 1.00
Required Date: 10/9/2009 **Req'd Qty:** 1.00
Reference:

Accept

Setup Start
Stop

Cust Item ID:
Customer:

Run Start
Stop

Approvals: **Process Plan:** _____ **Date:** _____ **Tooling:** _____ **Date:** _____
QC: _____ **Date:** _____ **SPC (Y/N):** _____ **Date:** _____

Sequence ID/ Work Center ID	Operation Description	Set Up/ Run Hours	Draw Number	Draw Rev.	Plan Code	Accept Qty	Reject Qty	Reject Number	Insp. Stamp
130	QC15- Crosstube Dimensional Check	0.00							
QC		=> S 09/10/20							
Quality Control	Memo	0.00							
140		0.00							
Crosstubes	Crosstubes								
Crosstubes	Memo	0.00							

1-Drill pilot holes in tube as per Dwg D212-664-241 using drill Jig DT8550 & DT8551

2-Ream hole to finish size in tube as per Dwg D212-664-241using drill Jig DT8550 & DT8551.Check dimensions between holes, both sides on both cuffs, to ensure alignment with saddle holes.

3-Deburr & Inspect for surface damage. Repair damage within limits as per Dwg D212-664-241

4-Scribe part # and batch # using vibrating stylus as per Dwg D212-664-241

Accept Qty: 1 Reject Qty: 0

Accept Qty: 1 Reject Qty: 0 Reject Number: MB 09-10-21

PTO

Dart Aerospace Ltd

W/O:		WORK ORDER CHANGES					
DATE	STEP	PROCEDURE CHANGE	By	Date	Qty	Approval Chief Eng / Prod Mgr	Approval QC Inspector

Part No: D212-664-201 **PAR #:** N/A **Fault Category:** Crosstube **NCR:** (Yes) No **DQA:** 1A **Date:** 09.12.08

Resolution: SCRAP **Disposition:** SCRAP. **QA: N/C Closed:** // **Date:** 08.12.11

NCR: 52217		WORK ORDER NON-CONFORMANCE (NCR)						
DATE	STEP	Description of NC Section A	Corrective Action Section B: Initial Chief Eng	Action Description Chief Eng	Sign & Date	Verification Section C	Approval Chief Eng	Approval QC Inspector
09.12.08	140	Tube dented @ saddle hole on cuff. Tube accidentally slipped & rotated in the employee's hands when being moved off ~~the~~ of the polishing stands,	↑	No NICKS/DENTS ARE PERMITTED ON TUBE PER ICA. CP ~~CALC~~ CALC'S NICK DEPTH ≈0.025". SCRAP TUBE CP 09.12.03	//	↑	↑	↑
		to the x-tube buggy. The cuff struck the head of the bolt to adjust the stand height. R.C.: Process: Not a lack of attention by the employee or carelessness.	09/12/07 0510 42	→ give to Russ/Dan for testing	091207	02/02/07	09/12/07 0510 42	02/02/07

NOTE: Date & initial all entries

H:\FORMS\Quality Assurance\approved QA\NCRWO RevE

Work Order ID 52217

Monday, September 21, 2009 7:52:04 AM

Item ID: D212-664-201
Revision ID: C
Item Name: Crosstube Aft

Accept

Setup **Start**
Stop

Start Date: 9/21/2009 **Start Qty:** 1.00
Required Date: 10/9/2009 **Req'd Qty:** 1.00
Reference:

Cust Item ID:
Customer:

Run **Start**
Stop

Approvals: **Process Plan:** _____ **Date:** _____ **Tooling:** _____ **Date:** _____
QC: _____ **Date:** _____ **SPC (Y/N):** _____ **Date:** _____

Sequence ID/ Work Center ID	Operation Description	Set Up/ Run Hours	Draw Number	Draw Rev.	Plan Code	Accept Qty	Reject Qty	Reject Number	Insp. Stamp
150	Crosstubes Chemical Conversion	0.00							
HandFXtube	**Memo**	0.00							
Hand Finishing Crosstubes	Chemical Conversion Coat as within 24 hours of bending and drilling								
160	QC3- Inspect Part Finish	0.00							
QC	**Memo**	0.00							
Quality Control									
170	QC5- Inspect part completeness to step on W/O	0.00							
QC	**Memo**	0.00							
Quality Control									

Work Order ID 52217

Monday, September 21, 2009 7:52:04 AM

Item ID: D212-664-201
Revision ID: C
Item Name: Crosstube Aft
Start Date: 9/21/2009 **Start Qty:** 1.00
Required Date: 10/9/2009 **Req'd Qty:** 1.00
Reference:

Accept

Cust Item ID:
Customer:

Setup **Start** **Stop**

Run **Start** **Stop**

Approvals: **Process Plan:** _____ **Date:** _____ **Tooling:** _____ **Date:** _____
QC: _____ **Date:** _____ **SPC (Y/N):** _____ **Date:** _____

Sequence ID/ Work Center ID	Operation Description	Set Up/ Run Hours	Draw Number	Draw Rev.	Plan Code	Accept Qty	Reject Qty	Reject Number	Insp. Stamp
180	Outsource process - NDT per QSI038 4.1	0.00							
Outsource2	**Memo**	0.00							
Outsource process - NDT	Liquid Penetrant Inspection as per QSI 038 Issue P/O:_____ LPI as per ASTM 1417 Level 2 Attach copy of NDT results to work order								
190	Receive & Inspect for Damage & Mat'l Certs Packaging	0.00							
Packaging	**Memo**	0.00							
Packaging	Ensure copy of NDT results attached to work order.								
200	QC5- Inspect part completeness to step on W/O	0.00							
QC	**Memo**	0.00							
Quality Control	Inspect for damage & ensure results are as per Dwg D212-664-241								

Work Order ID 52217

Monday, September 21, 2009 7:52:04 AM

Item ID: D212-664-201
Revision ID: C
Item Name: Crosstube Aft

Accept

Setup **Start**
Stop

Start Date: 9/21/2009 **Start Qty:** 1.00
Required Date: 10/9/2009 **Req'd Qty:** 1.00
Reference:

Cust Item ID:
Customer:

Run **Start**
Stop

Approvals: **Process Plan:** _____ **Date:** _____ **Tooling:** _____ **Date:** _____
QC: _____ **Date:** _____ **SPC (Y/N):** _____ **Date:** _____

Sequence ID/ Work Center ID	Operation Description	Set Up/ Run Hours	Draw Number	Draw Rev.	Plan Code	Accept Qty	Reject Qty	Reject Number	Insp. Stamp
210 SprayPaint Spray Painting	Spray Painting per QSI005 4.2 SprayPaint	0.00							
	Memo 1-Prime inside and outside crosstube as per QSI 005 4.2 2-Paint outside crosstube with White Imron as per QSI 005 4.2 PRIME: Start Time:_____ Fininsh Time:_____ PAINT: Start Time:_____ Finish Time:_____	0.00							
220 QC Quality Control	QC14- Inspect Spray Paint	0.00							
	Memo Then,Wrap in plastic bag to protect from scratches	0.00							

Work Order ID 52217

Monday, September 21, 2009 7:52:04 AM

Item ID: D212-664-201
Revision ID: C
Item Name: Crosstube Aft

Start Date: 9/21/2009 **Start Qty:** 1.00
Required Date: 10/9/2009 **Req'd Qty:** 1.00
Reference:

Accept

Cust Item ID:
Customer:

Setup **Start** **Stop**

Run **Start** **Stop**

Approvals: **Process Plan:** _____ **Date:** _____ **Tooling:** _____ **Date:** _____
QC: _____ **Date:** _____ **SPC (Y/N):** _____ **Date:** _____

Sequence ID/ Work Center ID	Operation Description	Set Up/ Run Hours	Draw Number	Draw Rev.	Plan Code	Accept Qty	Reject Qty	Reject Number	Insp. Stamp
230		0.00							
Crosstubes	Crosstubes								
Crosstubes	**Memo**	0.00							
	1- Lightly scuff the bonded area using a 320 grit sand paper and clean the area with 41058 wash 'n' wipe								
	2-Install supports with magnobond as per QSI 015 Adhere for for 12 Hrs A/R 6398 Magnobond Batch:_____ Expiry Date:_____								
	3-Install clamps as per Dwg D212-664-241. Torque clamps to 80-100 in lb.								
240	QC5- Inspect part completeness to step on W/O	0.00							
QC	**Memo**	0.00							
Quality Control									

Work Order ID 52217

Monday, September 21, 2009 7:52:04 AM

Item ID: D212-664-201
Revision ID: C
Item Name: Crosstube Aft

Start Date: 9/21/2009 **Start Qty:** 1.00
Required Date: 10/9/2009 **Req'd Qty:** 1.00
Reference:

Accept

Setup **Start**
Stop

Cust Item ID:
Customer:

Run **Start**
Stop

Approvals: **Process Plan:** _____ **Date:** _____ **Tooling:** _____ **Date:** _____
QC: _____ **Date:** _____ **SPC (Y/N):** _____ **Date:** _____

Sequence ID/ Work Center ID	Operation Description	Set Up/ Run Hours	Draw Number	Draw Rev.	Plan Code	Accept Qty	Reject Qty	Reject Number	Insp. Stamp
250	Pick Kit	0.00							
Packaging	**Memo**	0.00							
Packaging									
260	QC4- 100% Inspect kits for completeness	0.00							
QC	**Memo**	0.00							
Quality Control									
270		0.00							
Packaging	Packaging								
Packaging	**Memo**	0.00							
Packaging	Identify and pack for shipping as per PPP D212-664-201								

Work Order ID 52217

Monday, September 21, 2009 7:52:04 AM

Item ID: D212-664-201
Revision ID: C
Item Name: Crosstube Aft

Start Date: 9/21/2009 **Start Qty:** 1.00
Required Date: 10/9/2009 **Req'd Qty:** 1.00
Reference:

Accept

Cust Item ID:
Customer:

Setup **Start**
Stop

Run **Start**
Stop

Approvals: **Process Plan:** _____ **Date:** _____ **Tooling:** _____ **Date:** _____
QC: _____ **Date:** _____ **SPC (Y/N):** _____ **Date:** _____

Sequence ID/ Work Center ID	Operation Description	Set Up/ Run Hours	Draw Number	Draw Rev.	Plan Code	Accept Qty	Reject Qty	Reject Number	Insp. Stamp
280	QC21- Final Inspection - Work Order Release	0.00							
QC	**Memo**	0.00							
Quality Control									

W 9.12.07

Picklist Print

Monday, September 21, 2009 7:52:13 AM

5

Work Order ID: 52217

Parent Item: D212-664-201RevC

Parent Item Name: Crosstube Aft

Comments:

Start Date: 9/21/2009 **Required Date:** 10/9/2009

Start Qty: 1.00 **Required Qty:** 1.00

Component Item ID/ Item Name	Replacement Item ID	Mfg/ Purch	Bin Item	Primary Location	Last Location	Route Seq ID	Unit of Measure	Qty on Hand	Remaining Qty To Pick	Qty Issued	Date Issued	Status
D212-664-201TRNRevC Crosstube Turning Detail		Manufactured	No			110	Each	3.0000	1.0000	B-52741 ~~B-52739~~	MB 09-10-20 MB ~~09-10-15~~	

Warehouse Location	Loc Qty	Loc Code
Main Warehouse		
FG	3	
46386	1	
50991	1	
51220	1	

Component Item ID/ Item Name	Replacement Item ID	Mfg/ Purch	Bin Item	Primary Location	Last Location	Route Seq ID	Unit of Measure	Qty on Hand	Remaining Qty To Pick	Qty Issued	Date Issued	Status
D3595-063-530RevA RUBBER CUSHION		Manufactured	No			230	Each	208.0000	2.0000			

Warehouse Location	Loc Qty	Loc Code
Main Warehouse		
ST	208	
40780	2	
44998	2	
50030	100	
51776	104	

Picklist Print

Monday, September 21, 2009 7:52:13 AM

Work Order ID: 52217

Parent Item: D212-664-201RevC

Parent Item Name: Crosstube Aft

Comments:

Start Date: 9/21/2009 **Required Date:** 10/9/2009

Start Qty: 1.00 **Required Qty:** 1.00

Component Item ID/ Item Name	Replacement Item ID	Mfg/ Purch	Bin Item	Primary Location	Last Location	Route Seq ID	Unit of Measure	Qty on Hand	Remaining Qty To Pick	Qty Issued	Date Issued	Status
D2940-1RevB		Manufactured	No			230	Each	44.0000	2.0000			
Support												

Warehouse Location	Loc Qty	Loc Code
Main Warehouse		
ST	44	
24367	4	
25594	2	
45203	18	
47748	20	

Component Item ID/ Item Name	Replacement Item ID	Mfg/ Purch	Bin Item	Primary Location	Last Location	Route Seq ID	Unit of Measure	Qty on Hand	Remaining Qty To Pick	Qty Issued	Date Issued	Status
MS21920-28		Purchased	No			230	Each	136.0000	4.0000			
Clamp(per MIL-DTL-8783C)												

Warehouse Location	Loc Qty	Loc Code
OFFSHORE		
FG	5	
105884	5	
Main Warehouse		
ST	131	
106864	5	
108466	9	
108847	7	
109181	14	
109965	2	
111281	2	
111734	42	
112624	50	

Picklist Print

Monday, September 21, 2009 7:52:13 AM

Work Order ID: 52217

Parent Item: D212-664-201RevC

Parent Item Name: Crosstube Aft

Comments:

Start Date: 9/21/2009 **Required Date:** 10/9/2009

Start Qty: 1.00 **Required Qty:** 1.00

Component Item ID/ Item Name	Replacement Item ID	Mfg/ Purch	Bin Item	Primary Location	Last Location	Route Seq ID	Unit of Measure	Qty on Hand	Remaining Qty To Pick	Qty Issued	Date Issued	Status
D3428-1RevA		Manufactured	No			250	Each	31.0000	1.0000			
Placard												

Warehouse Location	Loc Qty	Loc Code
Main Warehouse		
ST096	31	
50790	31	

Component Item ID/ Item Name	Replacement Item ID	Mfg/ Purch	Bin Item	Primary Location	Last Location	Route Seq ID	Unit of Measure	Qty on Hand	Remaining Qty To Pick	Qty Issued	Date Issued	Status
MS21042L6		Purchased	No			250	Each	721.0000	6.0000			
Nut												

Warehouse Location	Loc Qty	Loc Code
Main Warehouse		
ST	721	
105077	22	
110002	5	
111548	94	
111578	400	
112492	200	

Picklist Print

Monday, September 21, 2009 7:52:13 AM

Work Order ID: 52217

Parent Item: D212-664-201RevC

Parent Item Name: Crosstube Aft

Comments:

Start Date: 9/21/2009 **Required Date:** 10/9/2009

Start Qty: 1.00 **Required Qty:** 1.00

Component Item ID/ Item Name	Replacement Item ID	Mfg/ Purch	Bin Item	Primary Location	Last Location	Route Seq ID	Unit of Measure	Qty on Hand	Remaining Qty To Pick	Qty Issued	Date Issued	Status
AN960JD616		Purchased	No			250	Each	712.0000	18.0000			
Washer												

Warehouse Location	Loc Qty	Loc Code
Main Warehouse		
ST	712	
107242	3	
107959	6	
109371	8	
110704	23	
111193	10	
111607	4	
112314	658	

Component Item ID/ Item Name	Replacement Item ID	Mfg/ Purch	Bin Item	Primary Location	Last Location	Route Seq ID	Unit of Measure	Qty on Hand	Remaining Qty To Pick	Qty Issued	Date Issued	Status
AN6-40A		Purchased	No			250	Each	74.0000	4.0000			
Bolt												

Warehouse Location	Loc Qty	Loc Code
Main Warehouse		
ST	74	
112314	4	
112612	20	
112679	50	

Picklist Print

Monday, September 21, 2009 7:52:13 AM

Work Order ID: 52217

Parent Item: D212-664-201RevC

Parent Item Name: Crosstube Aft

Comments:

Start Date: 9/21/2009 **Required Date:** 10/9/2009

Start Qty: 1.00 **Required Qty:** 1.00

Component Item ID/ Item Name	Replacement Item ID	Mfg/ Purch	Bin Item	Primary Location	Last Location	Route Seq ID	Unit of Measure	Qty on Hand	Remaining Qty To Pick	Qty Issued	Date Issued	Status
AN6-41A Bolt		Purchased	No			250	Each	53.0000	2.0000			

Warehouse Location	Loc Qty	Loc Code
Main Warehouse		
ST	53	
111605	33	
112489	20	

DART AEROSPACE LTD	Work Order:	52217
Description: Crosstube High Aft (205/212)	Part Number:	D212-664-201
Inspection Dwg: D212-664-241 **Rev:** C		Page 1 of 1

Required Dimension	Min	Max
Height	24.17	24.43
1/2 Span	53.59	53.85
Angle	49	52
Total Span	107.18	107.70

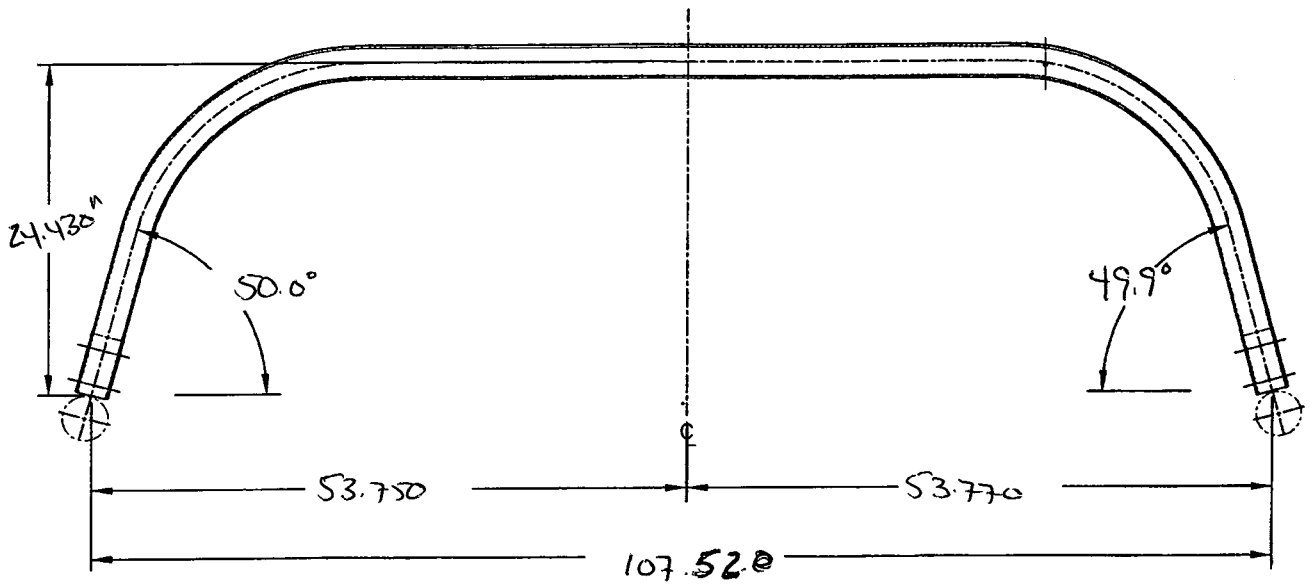

Comments

QC15 Inspection	S
Date	09/10/20

Rev	Date	Change	Revised by	Approved
A	07.02.06	New Issue	KJ/JM	
B	07.05.08	Dimensions updated per Dwg rev. C	KJ/JLM	

DESIGN PH	DRAWN BY PH	DART AEROSPACE LTD HAWKESBURY, ONTARIO, CANADA	
CHECKED	APPROVED	DRAWING NO. D212-664-241	REV. C SHEET 1 OF 3
DATE 07.03.08		TITLE CROSSTUBE ASS'Y (205/212 HI AFT)	SCALE NTS

A	00.12.12	NEW ISSUE
B	05.02.04	ADD HOLES FOR COMPATABILITY WITH BHT/AA SKIDTUBES
C	07.03.08	REMOVE -1009 ABRASION STRIP; ADD MAGNOBOND 6398, CUSHION, REVERSE CLAMPS

RELEASED
07.04.24
PER ECN 035
DEO ATTACHED

Qty	Part Number	Description
X	D212-664-241	CROSSTUBE ASSEMBLY (205/212 HIGH AFT)
1	D6006-129	CROSSTUBE
2	D2940-1	SUPPORT
4	D3595-063-530	RUBBER CUSHION
4	MS21920-28	CLAMP (OR MS21920-30)
A/R	MAGNOBOND 6398	ROCKWELL SPECIFICATION RBO-120-023 ADHESIVE (TEXTRON/BELL SPEC. 299-947-100, TYPE II, CLASS 2 ADHESIVE)

SHOP COPY
RETURN TO
ENGINEERING
UNCONTROLLED COPY
SUBJECT TO AMENDMENT
WITHOUT NOTICE
WORK ORDER
NO. 52217

GENERAL NOTES:

1) TOLERANCES ARE PER DART QSI 018 UNLESS OTHERWISE NOTED
2) MATERIAL: MANUFACTURED FROM D6006-129
   FINISHED LENGTH = 124.36±0.020
3) FINISH: CHEMICAL CONVERSION COAT PER DART QSI 005 4.1
   PRIME INSIDE AND OUTSIDE PER DART QSI 005 4.2
   PAINT OUTSIDE PER DART QSI 005 4.2
4) PART IS SYMMETRIC ABOUT CENTERLINE
5) RUN-OFF PART. BLEND OUT EDGE LONGITUDINALY, TRANSITION SHOULD BE SMOOTH.
6) BEND PROGRESSIVELY WITH A MINIMUM OF 5 PASSES. MAXIMUM TUBE FLATTENING DUE TO BENDING IS 6% BASED ON O.D.
7) LIQUID PENETRANT INSPECT OUTSIDE SURFACE OF CROSSTUBE PER QSI 038.
8) SCRIBE DART PART NUMBER AND BATCH NUMBER IN THIS AREA WITH VIBRATING STYLUS.
9) INSTALL D2940-1 SUPPORT USING 0.03" TO 0.06" THICK LAYER OF MAGNOBOND 6398 PER QSI 015. LET CURE FOR 12 HOURS AFTER INSTALLATION AND PRIOR TO PACKAGING.
10) INSTALL MS21920-28 CLAMPS WITH D3595-063-530 RUBBER CUSHIONS TO SECURE D2940-1 SUPPORT ON TOP SIDE OF CROSSTUBE. ENSURE CLAMPS ARE OPPOSITE OF CROSSTUBE SUPPORT
    NOTE: MS21920-30 CLAMPS CAN BE USED TO ACCOMMODATE VARYING DIAMETERS. ENSURE THERE IS A MINIMUM OF 1.5 THREADS IN SAFETY ON THE NUTS.
11) EXTREME CARE MUST BE TAKEN TO PROTECT THE OUTSIDE SURFACE OF THE TUBE. THE OUTSIDE SURFACE MUST BE SMOOTH AND FREE FROM SURFACE DEFECTS SUCH AS SCRATCHES, NICKS, OR DENTS. DEFECTS UP TO 0.005" MAY BE BLENDED OUT LONGITUDINALLY. CIRCUMFERENTIAL GRIND MARKS ARE UNACCEPTABLE.
12) TORQUE CLAMPS 80 TO 100 IN-LB.

Copyright © 2000 by DART AEROSPACE LTD
THIS DOCUMENT IS PRIVATE AND CONFIDENTIAL AND IS SUPPLIED ON THE EXPRESS CONDITION THAT IT IS NOT TO BE USED FOR ANY PURPOSE OR COPIED OR COMMUNICATED TO ANY OTHER PERSON WITHOUT WRITTEN PERMISSION FROM DART AEROSPACE LTD.

W/O 52217

RELEASED 07.04.24 PER ECN 0.37

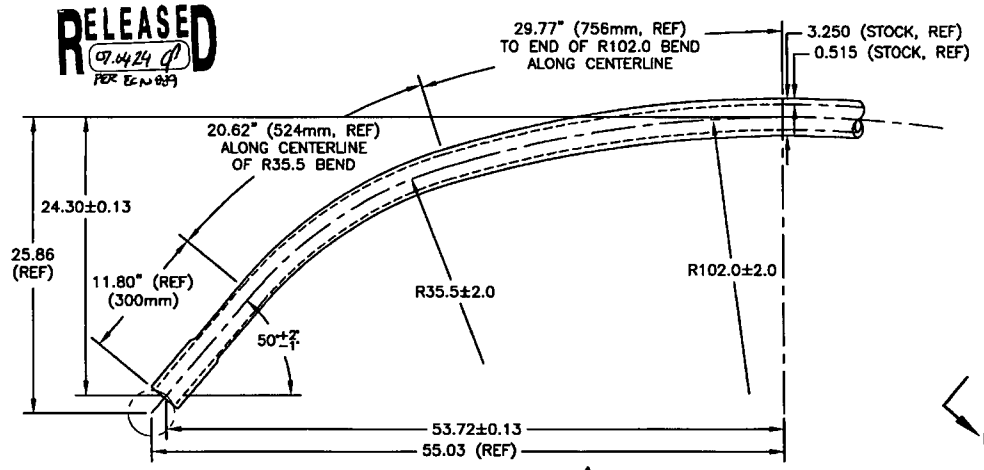

BENDING DETAIL 6
SCALE 1:10

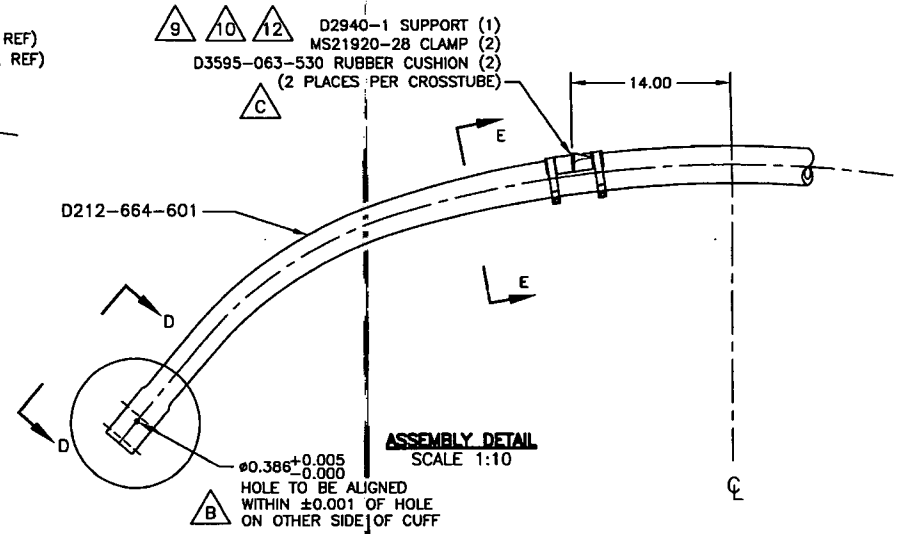

ASSEMBLY DETAIL
SCALE 1:10

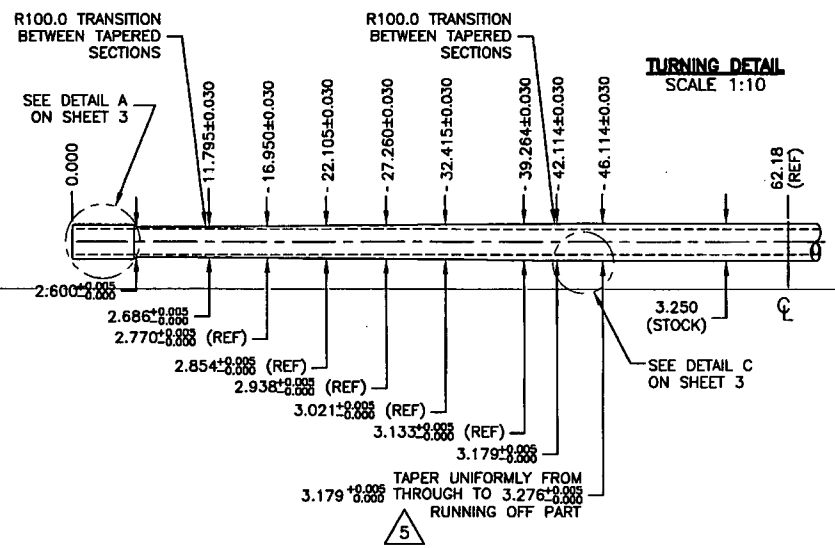

TURNING DETAIL
SCALE 1:10

VIEW D-D: CUFF DETAIL
SCALE 2:5

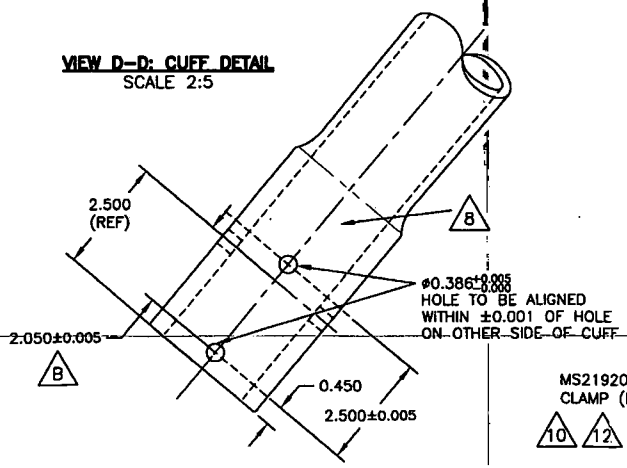

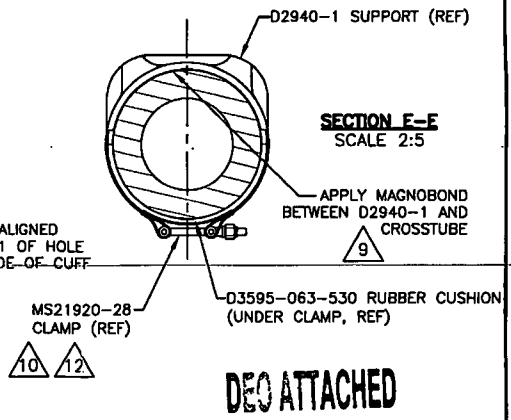

SECTION E-E
SCALE 2:5

DEO ATTACHED

COPYRIGHT © 2000 BY DART AEROSPACE LTD.

THIS DOCUMENT IS PRIVATE AND CONFIDENTIAL AND IS SUPPLIED ON THE EXPRESS CONDITION THAT IT IS NOT TO BE USED FOR ANY PURPOSE OR COPIED OR COMMUNICATED TO ANY OTHER PERSON WITHOUT WRITTEN PERMISSION FROM DART AEROSPACE LTD.

DESIGN PH	DRAWN BY PH	DART	DART AEROSPACE LTD. HAWKESBURY, ONTARIO, CANADA
CHECKED	APPROVED	DRAWING NO. D212-664-241	REV. C SHEET 2 OF 3
DATE 07.03.08		TITLE CROSSTUBE ASS'Y (205/212 HI AFT)	SCALE 1:10

W/O 52217

RELEASED 07.04.24 PER ECN 869

DEO ATTACHED

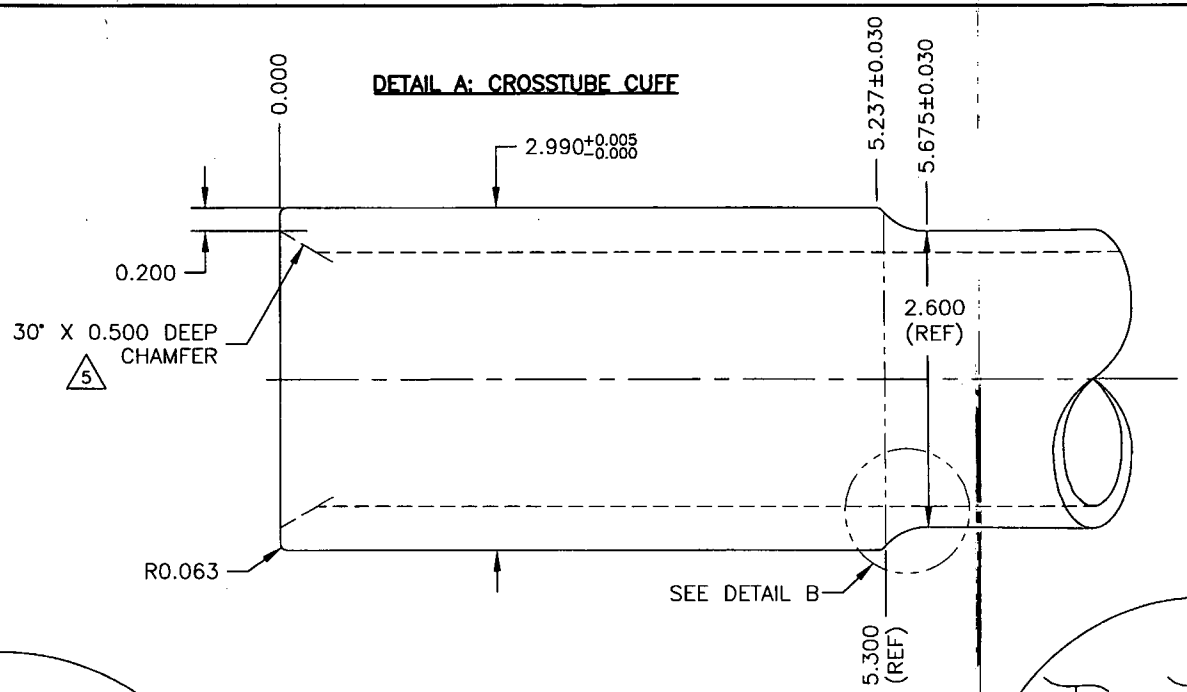

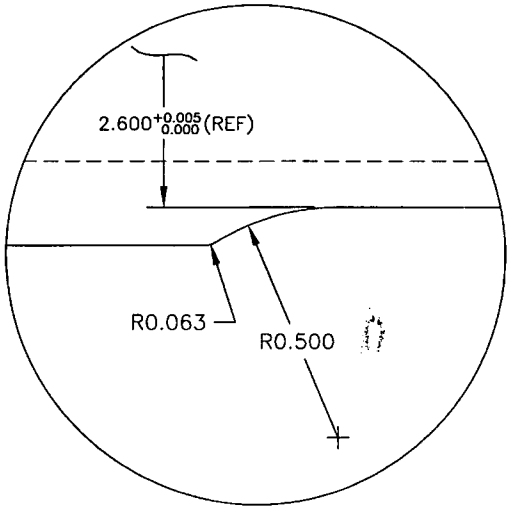

DETAIL B: CUFF TRANSITION
SCALE 4:1

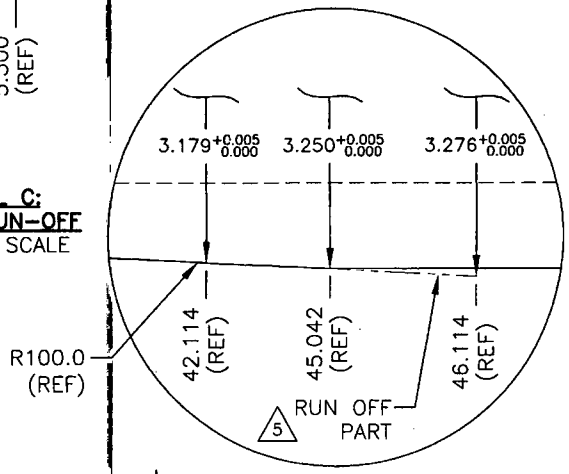

DETAIL C: TAPER RUN-OFF
NOT TO SCALE

COPYRIGHT © 2000 BY DART AEROSPACE LTD.

THIS DOCUMENT IS PRIVATE AND CONFIDENTIAL AND IS SUPPLIED ON THE EXPRESS CONDITION THAT IT IS NOT TO BE USED FOR ANY PURPOSE OR COPIED OR COMMUNICATED TO ANY OTHER PERSON WITHOUT WRITTEN PERMISSION FROM DART AEROSPACE LTD.

DESIGN PH	DRAWN BY PH	DART	DART AEROSPACE LTD. HAWKESBURY, ONTARIO, CANADA
CHECKED	APPROVED	DRAWING NO. D212-664-241	REV. C SHEET 3 OF 3
DATE 07.03.08		TITLE CROSSTUBE ASS'Y (205/212 HI AFT)	SCALE 1:1

W/O 5 2217

DRAWING NO.	TITLE	REV. C	DART AEROSPACE LTD ENGINEERING ORDER	D.E.O. NO.	SHEET NO.	SCALE
D212-664-241	CROSSTUBE			D212-664-241-C-1	SHEET 1 OF 1	NTS

DRAWN	CHECKED	MFG. APPR.	APPROVED	DE APPR.
09.05.01	09.06.15	09.06.15	09/06/16	09/06/16

CHANGE:
ADD THE FOLLOWING CROSSTUBE ASSEMBLY:

Part Number	Description
D212-664-241B	CROSSTUBE ASSEMBLY (214 HIGH AFT)

THE D212-664-241B CROSSTUBE HAS THE SAME PARTS LIST AS THE D212-664-241 CROSSTUBE. HOWEVER, INSTALL THE SUPPORTS AS SHOWN IN FIGURE 1 OF THIS ENGINEERING ORDER. THE NEW KIT IS OTHERWISE ASSEMBLED PER THE D212-664-241 CROSSTUBE.

RELEASED
09/06/22

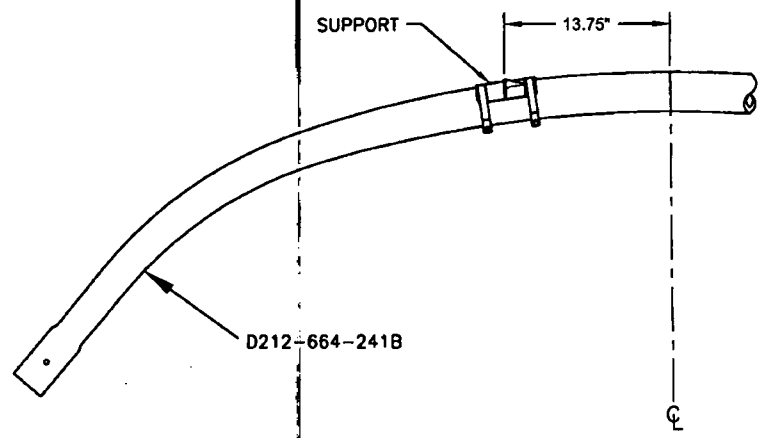

FIGURE 1 - SUPPORT INSTALLATION

COPYRIGHT © 2009 BY DART AEROSPACE LTD
THIS DOCUMENT IS PRIVATE AND CONFIDENTIAL AND IS SUPPLIED ON THE EXPRESS CONDITION THAT IT IS NOT TO BE USED FOR ANY PURPOSE OR COPIED OR COMMUNICATED TO ANY OTHER PERSON WITHOUT WRITTEN PERMISSION FROM DART AEROSPACE LTD.